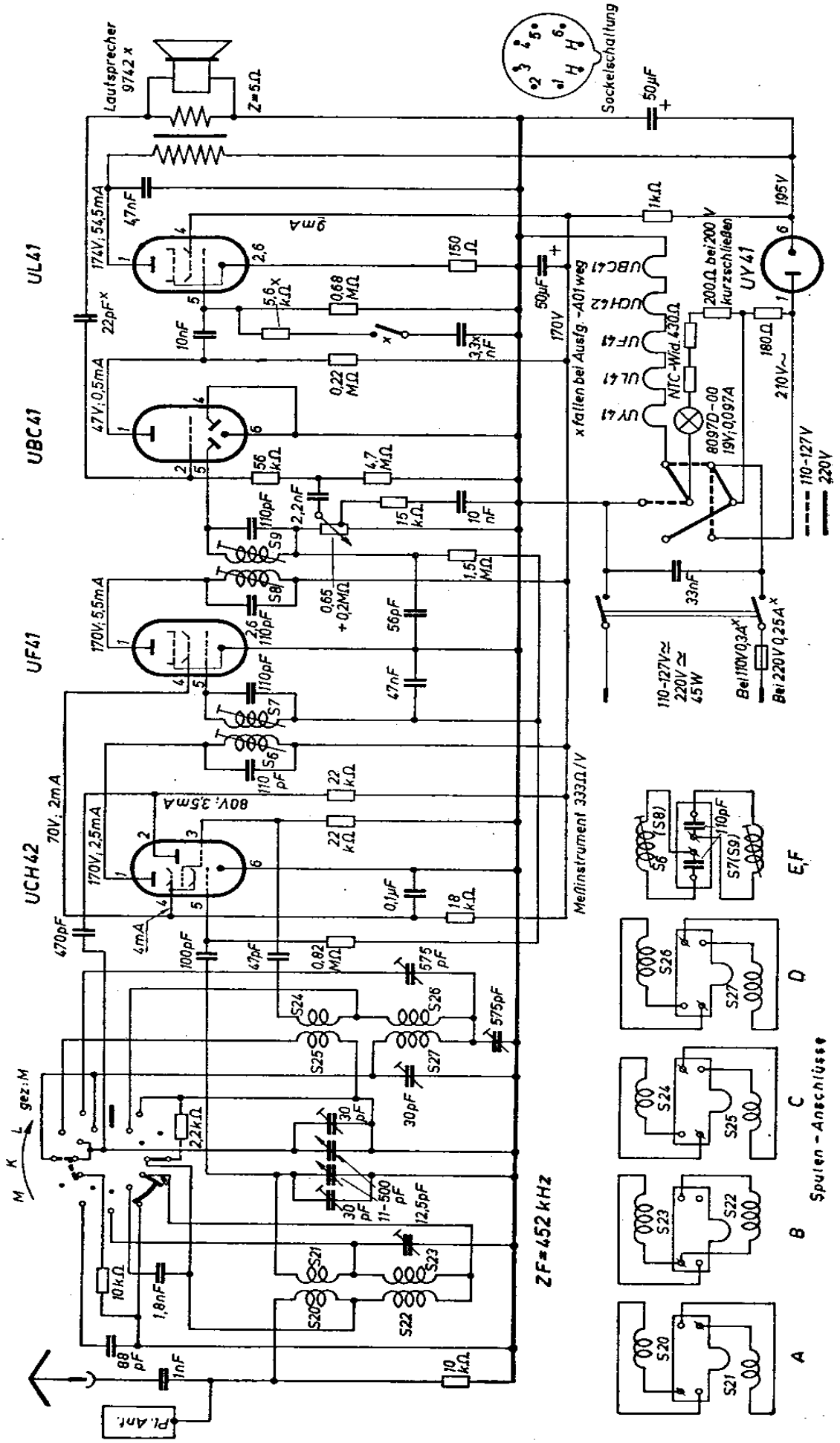Philips Philetta 51 BD 200 U