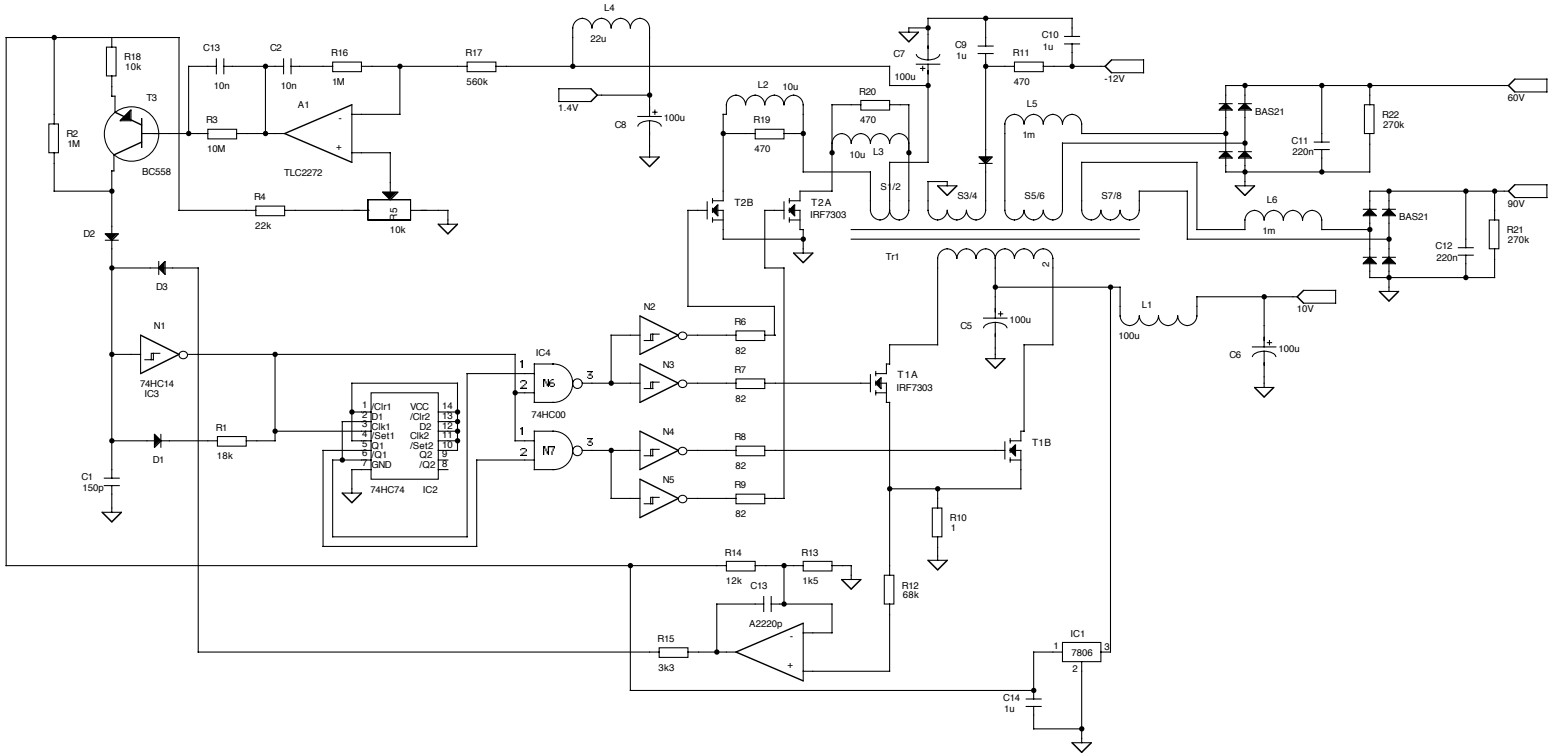
R18
10k
R2
1M
T3
BC558
C13
10n
C2
10n
R16
1M
R17
560k
L4
22u
1.4V
C8
100u
R3
10M
A1
TLC2272
R4
22k
R5
10k
D2
D3
N1
74HC14
IC3
D1
R1
18k
C1
150p
IC4
N6
74HC00
N7
74HC74
IC2
/Clr1
D1
Clk1
/Set1
Q1
GND
VCC
/Clr2
D2
Clk2
/Set2
Q2
/Q2
N2
N3
N4
N5
R6
82
R7
82
R8
82
R9
82
L2
10u
R19
470
R20
470
10u
L3
T2B
T2A
IRF7303
S1/2
S3/4
S5/6
S7/8
Tr1
C7
100u
C9
1u
R11
470
C10
1u
-12V
L5
1m
BAS21
C11
220n
R22
270k
60V
L6
1m
BAS21
C12
220n
R21
270k
90V
C5
100u
T1A
IRF7303
T1B
L1
100u
C6
100u
10V
R10
1
R12
68k
R14
12k
R13
1k5
C13
A2220p
R15
3k3
IC1
7806
C14
1u